TRW BUILDING AUC-1
SITE PLAN

LOT 1, BLOCK 1, SHEA CENTER SUBDIVISION FILING NO.1
CITY OF AURORA, COUNTY OF ARAPAHOE, STATE OF COLORADO
A PART OF THE NORTH 1/2 OF SECTION 16, T. 4 S., R. 66 W. OF THE 6TH P.M.

SITE AND BUILDING DATA

LAND AREA (WITHIN PROPERTY LINES):	8.133 ACRES (~354,294 SF)
GROSS FLOOR AREA:	104,135 SF (0.29 F.A.R.)
NUMBER OF BUILDINGS:	ONE
NUMBER OF STORIES:	THREE
MAXIMUM HEIGHT OF BUILDINGS:	60 FEET
3 2015 IBC TYPE 1B CONSTRUCTION, FULLY SPRINKLERED	
TOTAL BUILDING COVERAGE:	9.8%, 34,721 SF
HARD SURFACE AREA:	47.3%, 167,584 SF
LANDSCAPE AREA:	42.9%, 151,989 SF
PRESENT ZONING CLASSIFICATION:	PCZD (GDP 1972-2061)
PROPOSED USES:	OFFICE
3 2015 IBC OCCUPANCY TYPE B - BUSINESS	

SIGNAGE DATA:

PERMITTED MAXIMUM SIGN AREA:	321 SF
PROPOSED SIGN AREA:	~184 SF EXCL. DIRECTIONAL
TYPE OF SIGNS:	(1) MONUMENT GROUND SIGN AT 32 SF PER FACE (64 SF TOTAL), (4) WALL SIGNS AT ~30 SF EACH (~120 SF TOTAL), DIRECTIONAL SIGNAGE

ACCESSIBLE

PARKING DATA:

PARKING SPACES REQUIRED (1/300):	3 347
PARKING SPACES PROVIDED AND % COMPACT:	337 REGULAR (0% COMPACT)
ACCESSIBLE SPACES REQUIRED:	8
3 ACCESSIBLE SPACES PROVIDED:	3 13 (2 VAN ACCESSIBLE)
TOTAL PARKING SPACES PROVIDED:	350
LOADING SPACES REQUIRED:	1 IN SERVICE COURT
LOADING SPACES PROVIDED:	2 IN DRIVES

SHEET INDEX

1 COVER SHEET
2 SITE PLAN NOTES
3 SITE PLAN
3 3A SITE PLAN
3B FENCE & GATE ELEVATIONS AND DETAILS
3C TRAFFIC CONTROL ENLARGED PLANS
3D TRAFFIC CONTROL ENLARGED PLANS
4 LANDSCAPE NOTES
6 LANDSCAPE PLAN
7 LANDSCAPE PLAN
8 LANDSCAPE PLAN
3 8A LANDSCAPE PLAN
9 LANDSCAPE PLAN
9A LANDSCAPE PLAN
10 TREE MITIGATION PLAN 'A'
11 TREE MITIGATION PLAN 'B'
3 12 LANDSCAPE NOTES & DETAILS

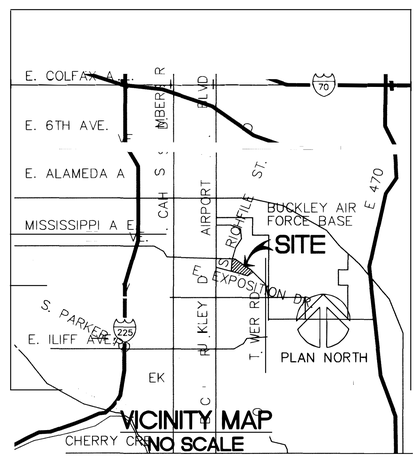

VICINITY MAP
NO SCALE

GENERAL NOTES

3

THE DEVELOPER, HIS OR HER SUCCESSORS AND ASSIGNS SHALL BE RESPONSIBLE FOR INSTALLATION, MAINTENANCE AND REPLACEMENT OF THE ACCESS CONTROL GATE OR BARRIER SYSTEM TO ENSURE EMERGENCY VEHICLE ACCESS TO WITHIN THE SITE. IF THE ABOVE CONDITIONS ARE NOT MET, THE OWNERS, HIS OR HER SUCCESSORS AND ASSIGNS SHALL BE REQUIRED BY FIRE DPARTMENT ORDER NOTICE THAT ALL AFFECTED GATES BE CHAINED AND LOCKED IN THE OPEN POSITION UNTIL REPAIRED OR REPLACED AND RETESTED TO ALL CITY OF AURORA STANDARDS AT THE TIME OF THE VIOLATION. IF THE GATING SYSTEM IS NOT MAINTAINED TO THE SATISFACTION OF THE FIRE DEPARTMENT, THE LICENSE FOR THE EMERGENCY VEHICLE GATE OPENING SYSTEM WILL BE REVOKED AND THE GATING SYSTEM MUST BE REMOVED. MANUALY OPERATED GATING SYSTEMS SHALL BE EQUIPPED WITH A KNOX PADLOCK OR OTHER APPROVED KNOX LOCKING DEVICE. GATING SYSTEMS WILL BE INSTALLED IN ACCORDANCE WITH THE "GATING SYSTEMS CROSSING FIRE APPARATUS ACCESS ROADS CHECKLIST". A SEPARATE BUILDING PERMIT THROUGH THE BUILDING DIVISION IS REQUIRED TO BE OBTAINED BY THE CONTRACTOR PRIOR TO THE INSTALLATION OF ANY GATING BARRIER SYSTEM THAT CROSSES A DEDICATED FIRE LANE EASEMENT. ALL CROSSINGS OR ENCROACHMENTS INTO EASEMENTS AND RIGHTS-OF-WAY OWNED BY THE CITY OF AURORA IDENTIFIED AS BEING PRIATELY-OWNED AND MAINTAINED HEREIN ARE ACKNOWLEDGED BY THE UNDERSIGNED AS BEING SUBJECT TO CITY'S USE AND OCCUPANCY OF SAID EASEMENTS ORRIGHTS-OF-WAY. THE UNDERSIGNED, ITS SUCCESSORS AND ASSIGNS FURTHER AGREE TO REMOVE, REPAIR, REPLACE, RELOCATE, MODIFY, OR OTHERWISE ADJUST SAID CROSSINGS OR ENCROACHMENTS UPON THE REQUEST FROM THE CITY AND AT NO EXPENSE TO THE CITY. THE CITY RESERVES THE RIGHT TO MAKE FULL USE OF THE EASEMENTS AND RIGHTS-OF-WAY AS MAY BE NECESSARY OR CONVENIENT AND THE CITY RETAINS ALL RIGHTS TO OPERATE, MAINTAIN, INSTALL, REPAIR, REMOVE, OR RELOCATE ANY CITY FACILITIES LOCATED WITHIN SAID EASEMENTS AND RIGHTS-OF-WAY AT ANY TIME AND IN SUCH A MANNER AS IT DEEMS NECESSARY OR CONVENIENT.ARCHITECTURAL FEATURES (I.E. BAY WINDOWS, FIREPLACES, ROOF OVERHANGS GUTTERS, EAVES, FOUNDATION, FOOTINGS CANTILEVERED WALLS, ETC.) ARE NOT ALLOWED TO ENCROACH INTO ANY EASEMENT OR FIRE LANE. THE INSTALLATION OF ANY GATING SYSTEM WILL REQUIRE A CITY OF AURORA LICENSED CONTRACTOR TO OBTAIN A BUILDING PERMIT THROUGH THE AURORA BUILDING DIVISION PRIOR TO THE START OF ANY WORK. THIS WOULD BE CONSIDERD A STRUCTURAL, LIFE SAFETY AND ELECTRICAL REVIEW WITHIN THE BUILDING DIVISION THAT IS CONDUCTED ON BEHALF OF THE FIRE CHIEF.

AMENDMENTS

1 ADD ATM 4-25-02
2 ADD ATM SHELTER 01-08-03
3 MINOR AMENDMENT 2001-6037-06
ADD PERIMETER FENCING AND PARKING
LOT ACCESS CONTROL GATES AND NEW
ACCESSIBLE PARKING SPACES

LEGAL DESCRIPTION:

LOT 1, BLOCK 1, SHEA CENTER SUBDIVISION FILING NO. 1.

THIS SITE PLAN AND ANY AMENDMENTS HERETO, UPON APPROVAL BY THE CITY OF AURORA AND RECORDING, SHALL BE BINDING UPON THE APPLICANTS THEREFORE, THEIR SUCCESSORS AND ASSIGNS. THIS PLAN SHALL LIMIT AND CONTROL THE ISSUANCE AND VALIDITY OF ALL BUILDING PERMITS, AND SHALL RESTRICT AND LIMIT THE CONSTRUCTION, LOCATION, USE, OCCUPANCY AND OPERATION OF ALL LAND AND STRUCTURES WITHIN THIS PLAN TO ALL CONDITIONS, REQUIREMENTS, LOCATIONS AND LIMITATIONS SET FORTH HEREIN. ABANDONMENT, WITHDRAWAL OR AMENDMENT OF THIS PLAN MAY BE PERMITTED ONLY UPON APPROVAL OF THE CITY OF AURORA.

IN WITNESS THEREOF, TRW BTS ONE, LLC HAS CAUSED THESE PRESENTS TO BE EXECUTED THIS_____DAY OF_____AD, 2001.

OWNER: TRW BTS ONE, LLC, A COLORADO LIMITED LIABILITY COMPANY

BY: J.F. SHEA CO., INC., A NEVADA CORPORATION, ITS MANAGER

BY: _____
ASSISTANT SECRETARY

BY: _____
ASSISTANT SECRETARY

STATE OF COLORADO)
)SS
COUNTY OF DOUGLAS)

THIS DOCUMENT ACKNOWLEDGED BEFORE ME THIS 8th DAY OF OCTOBER, 2001, BY Jeffrey H. Donelson, AS ASSISTANT SECRETARY, AND John Kitrow, AS ASSISTANT SECRETARY, OF J.F. SHEA CO., INC., A NEVADA CORPORATION, MANAGER OF TRW BTS ONE, LLC A CLORADO LIMITED LIABILITY COMPANY.

WITNESS MY HAND AND OFFICIAL SEAL:

MY COMMISSION EXPIRES: 9-30-2002

NOTARY PUBLIC LAUREL LYNN LANDSMAN STATE OF COLORADO

Laurel Lynn Landsman
(NOTARY PUBLIC)

CITY OF AURORA APPROVALS:

CITY ATTORNEY: _____ DATE: 10/10/01

PLANNING DIRECTOR: Denise M. Balkus DATE: 10-9-01

PLANNING COMMISSION: _____ DATE: 7-25-01
(CHAIRPERSON)

CITY COUNCIL: NA DATE: _____
(MAYOR)

ATTEST: NA DATE: _____
(CITY CLERK)

RECORDER'S CERTIFICATE:

ACCEPTED FOR FILING IN THE OFFICE OF THE CLERK AND RECORDER OF _____ COLORADO AT ____ O'CLOCK __M, THIS _____ DAY OF _____ AD, 2001.

CLERK AND RECORDER: _____

DEPUTY: _____

PROJECT NO. 01109.00

TRW

TRW Building AUC-1
ALAMEDA AND RICHFIELD
AURORA, COLORADO
Shea Properties

PRINT RECORD

PURPOSE	DATE
SP SUBMITTAL	5-11-01
2ND SUBMISSION	6-25-01
3RD SUBMISSION	7-17-01
4TH SUBMISSION	9-10-01
5TH SUBMISSION	10-2-01

REVISION RECORD

NO.	CHANGE	DATE
1	PER AURORA	6-25-01
2	PER AURORA	7-17-01
3	PER AURORA	9-10-01
4	PER AURORA	10-2-01

DRAWN KV / DW
CHECKED JE
DATE 10-2-01
SHEET TITLE COVER SHEET

M+O+A ARCHITECTURAL PARTNERSHIP
ARCHITECTURE PLANNING INTERIOR DESIGN
1900 WAZEE STREET, SUITE 100, DENVER COLORADO 80202 (303) 308-1190

SHEET 1 OF TOTAL 16

TRW BUILDING AUC-1 2001-6037-3

TRW BUILDING AUC-1
SITE PLAN

LOT 1, BLOCK 1, SHEA CENTER SUBDIVISION FILING NO.1
CITY OF AURORA, COUNTY OF ARAPAHOE, STATE OF COLORADO
A PART OF THE NORTH 1/2 OF SECTION 16, T. 4 S., R. 66 W. OF THE 6TH P.M.

SITE PLAN NOTES:

1. THE DEVELOPER, HIS SUCCESSORS AND ASSIGNS, SHALL BE RESPONSIBLE FOR INSTALLATION, MAINTENANCE AND REPLACEMENT OF ALL FIRE LANE SIGNS AS REQUIRED BY THE CITY OF AURORA.

2. ALL SIGNS MUST CONFORM TO THE CITY OF AURORA SIGN CODE.

3. RIGHT-OF-WAY FOR INGRESS AND EGRESS FOR SERVICE AND EMERGENCY VEHICLES IS GRANTED OVER, ACROSS, ON AND THROUGH ANY AND ALL PRIVATE ROADS AND WAYS NOW OR HEREAFTER ESTABLISHED ON THE DESCRIBED PROPERTY, AND THE SAME ARE HEREBY DESIGNATED AS "SERVICE/EMERGENCY AND UTILITY EASEMENTS" AND SHALL BE POSTED "NO PARKING – FIRE LANE"

4. "ACCESSIBLE EXTERIOR ROUTES" SHALL BE PROVIDED FROM PUBLIC TRANSPORTATION STOPS, ACCESSIBLE PARKING, ACCESSIBLE PASSENGER LOADING ZONES AND PUBLIC SIDEWALKS TO THE ACCESSIBLE BUILDING ENTRANCE THEY SERVE. AT LEAST 50% OF ALL BUILDING ENTRANCES SHALL BE THE MOST PRACTICAL DIRECT ROUTE. NO SLOPE ALONG THIS ROUTE MAY EXCEED 1:20 WITHOUT PROVIDING A RAMP WITH A MAXIMUM SLOPE OF 1:12 AND HANDRAILS. CROSSWALKS ALONG THIS ROUTE SHALL BE WIDE ENOUGH TO WHOLLY CONTAIN THE CURB RAMP WITH A MINIMUM WIDTH OF 36", AND SHALL BE PAINTED WITH WHITE STRIPES. REQUIRED ACCESSIBLE MEANS OF EGRESS SHALL BE CONTINUOUS FROM EACH REQUIRED ACCESSIBLE OCCUPIED AREA TO THE PUBLIC WAY. THE "ACCESSIBLE EXTERIOR ROUTES" SHALL COMPLY WITH U.B.C. CHAPTER 11, APPENDIX 11, AND C.A.B.O./A.N.S.I.117.1.

5. THE APPLICANT HAS THE OBLIGATION TO COMPLY WITH ALL APPLICABLE REQUIREMENTS OF THE AMERICAN WITH DISABILITIES ACT.

6. THE DEVELOPER, HIS SUCCESSORS AND ASSIGNS, SHALL BE RESPONSIBLE FOR INSTALLATION, MAINTENANCE AND REPLACEMENT OF ALL LANDSCAPING MATERIALS SHOWN OR INDICATED ON THE APPROVED SITE PLAN OR LANDSCAPE PLAN ON FILE IN THE PLANNING DEPARTMENT. ALL LANDSCAPING WILL BE INSTALLED PRIOR TO ISSUANCE OF CERTIFICATE OF OCCUPANCY.

3 7. ALL CROSSINGS OR ENCROACHMENTS INTO EASEMENTS AND RIGHTS-OF-WAY OWNED BY THE CITY OF AURORA ("CITY") IDENTIFIED AS BEING PRIVATELY-OWNED AND MAINTAINED HEREIN ARE ACKNOWLEDGED BY THE UNDERSIGNED AS BEING SUBJECT TO CITY'S USE AND OCCUPANCY OF SAID EASEMENTS OR RIGHTS-OF-WAY.

SITE PLAN NOTES (continued)

3 THE UNDERSIGNED, ITS SUCCESSORS AND ASSIGNS, FURTHER AGREES TO REMOVE, REPAIR, REPLACE, RELOCATE, MODIFY, OR OTHERWISE ADJUST SAID CROSSINGS OR ENCROACHMENTS UPON REQUEST FROM THE CITY AND AT NO EXPENSE TO THE CITY. THE CITY RESERVES THE RIGHT TO MAKE FULL USE OF THE EASEMENTS AND RIGHTS-OF-WAY AS MAY BE NECESSARY OR CONVENIENT AND THE CITY RETAINS ALL RIGHTS TO OPERATE, MAINTAIN, INSTALL, REPAIR, REMOVE OR RELOCATE ANY CITY FACILITIES LOCATED WITHIN SAID EASEMENTS AND RIGHTS-OF-WAY AT ANY TIME AND IN SUCH A MANNER AS IT DEEMS NECESSARY OR CONVENIENT.

8. THE APPROVAL OF THIS DOCUMENT DOES NOT CONSTITUTE FINAL APPROVAL OF GRADING, DRAINAGE, UTILITY, PUBLIC IMPROVEMENTS AND BUILDING PLANS. CONSTRUCTION PLANS MUST BE REVIEWED AND APPROVED BY THE APPROPRIATE AGENCY PRIOR TO THE ISSUANCE OF BUILDING PERMITS.

9. ALL BUILDING ADDRESS NUMBERS SHALL COMPLY WITH SECTIONS 126-271 AND 126-278 OF THE AURORA CITY CODE.

10. ALL ROOFTOP MECHANICAL EQUIPMENT AND VENTS GREATER THAN 8 INCHES IN DIAMETER MUST BE SCREENED. SCREENING MAY BE DONE EITHER WITH AN EXTENDED PARAPET WALL OR A FREE-STANDING SCREEN WALL OF A MATERIAL, COLOR, AND DESIGN MATCHING THE BUILDING. SCREENS SHALL BE AT LEAST AS HIGH AS THE EQUIPMENT THEY HIDE. IF EQUIPMENT IS VISIBLE BECAUSE SCREENS DON'T MEET THIS MINIMUM HEIGHT REQUIREMENT, THE DIRECTOR OF PLANNING MAY REQUIRE CONSTRUCTION MODIFICATIONS PRIOR TO THE ISSUANCE OF A CERTIFICATE OF OCCUPANCY.

11. NOTWITHSTANDING ANY SURFACE IMPROVEMENTS, LANDSCAPING, PLANTING OR CHANGES SHOWN IN THESE SITE OR CONSTRUCTION PLANS, OR ACTUALLY CONSTRUCTED OR PUT IN PLACE, ALL UTILITY EASEMENTS MUST REMAIN UNOBSTRUCTED AND FULLY ACCESSIBLE ALONG THEIR ENTIRE LENGTH TO ALLOW FOR ADEQUATE MAINTENANCE EQUIPMENT. ADDITIONALLY, NO INSTALLATION, PLANTING, CHANGE IN THE SURFACE, ET CETERA SHALL INTERFERE WITH THE OPERATION OF THE UTILITY LINES PLACED WITHIN THE EASEMENT. BY SUBMITTING THESE SITE OR CONSTRUCTION PLANS FOR APPROVAL, THE LANDOWNER RECOGNIZES AND ACCEPTS THE TERMS, CONDITIONS AND REQUIREMENTS OF THIS NOTE.

12. ALL INTERESTED PARTIES ARE HEREBY ALERTED THAT THIS SITE PLAN IS SUBJECT TO ADMINISTRATIVE CHANGES AND AS SHOWN ON THE ORIGINAL SITE PLAN ON FILE IN THE AURORA CITY PLANNING OFFICE AT THE MUNICIPAL BUILDING. A COPY OF THE OFFICIAL CURRENT PLAN MAY BE PURCHASED THERE. LIKEWISE, SITE PLANS ARE REQUIRED TO AGREE WITH THE APPROVED SUBDIVISION PLAT OF RECORD AT THE TIME OF A BUILDING PERMIT;

SITE PLAN NOTES (continued)

AND IF NOT, MUST BE AMENDED TO AGREE WITH THE PLAT AS NEEDED, OR VICE VERSA.

13. ERRORS IN APPROVED SITE PLANS RESULTING FROM COMPUTATIONS OR INCONSISTENCIES IN THE DRAWINGS MADE BY THE APPLICANT ARE THE RESPONSIBILITY OF THE PROPERTY OWNER OF RECORD. WHERE FOUND, THE CURRENT MINIMUM CODE REQUIREMENTS WILL APPLY AT THE TIME OF BUILDING PERMIT. PLEASE BE SURE THAT ALL PLAN COMPUTATIONS ARE CORRECT.

14. ALL REPRESENTATIONS AND COMMITMENTS MADE BY APPLICANTS AND PROPERTY OWNERS AT PUBLIC HEARINGS REGARDING THIS PLAN ARE BINDING UPON THE APPLICANT, PROPERTY OWNER, AND ITS HEIRS, SUCCESSORS, AND ASSIGNS.

15. THE VENDOR OF ANY FUTURE SALE OF THE REAL PROPERTY SHALL PROVIDE THE REQUIRED NOTICE PER CITY CODE SECTION 146-1587(C) TO BE RECORDED WITH THE COUNTY CLERK AND RECORDER AND SHALL PROVIDE SUCH NOTICE TO EACH PROSPECTIVE PURCHASER OF ANY AND ALL SAID PROPERTY.

16. TRW BTS ONE, LLC, 300 WEST PLAZA DRIVE, SUITE 100, HIGHLANDS RANCH, COLORADO 80126, ITS SUCCESSORS OR ASSIGNS SHALL BE RESPONSIBLE FOR 25% OF THE SIGNAL INSTALLATION COSTS AT THE INTERSECTION OF RICHFIELD STREET AND ALAMEDA AVENUE IF AND WHEN TRAFFIC SIGNAL WARRANTS ARE SATISFIED. TRAFFIC SIGNAL WARRANTS TO CONSIDER SHALL BE WARRANTS NUMBER 1 THROUGH 10 AS DESCRIBED IN THE 1988 MANUAL ON UNIFORM TRAFFIC CONTROL DEVICES. FOR WARRANT PURPOSES, RICHFIELD STREET APPROACH TRAFFIC SHALL BE COMPRISED OF ALL THROUGH AND LEFT-TURN MOVEMENTS AND 50% OF RIGHT TURN MOVEMENTS. A SIGNAL PHASING AGREEMENT (INITIATED BY THE CITY) SHALL BE SIGNED BY THE APPLICANT/OWNER PRIOR TO ISSUANCE OF A BUILDING PERMIT.

3 17. ARCHITECTURAL FEATURES (I.E. BAY WINDOWS, FIREPLACES, ROOF OVERHANG, GUTTERS, EAVES, FOUNDATION, FOOTINGS, CANTILEVERED WALLS, ETC.) ARE NOT ALLOWED TO ENCROACH INTO ANY EASEMENT OR FIRE LANE.

18. STREETLIGHTS ARE REQUIRED ALONG ALL PUBLIC STREETS ADJACENT TO THIS DEVELOPMENT AND THAT INSTALLATION COSTS ARE FUNDED BY THIS DEVELOPER/OWNER.

PROJECT NO. 01109.00

TRW

TRW Building AUC-1
ALAMEDA AND RICHFIELD
AURORA, COLORADO
Shea Properties

PRINT RECORD

PURPOSE	DATE
SP SUBMITTAL	5-11-01
2ND SUBMISSION	6-25-01
3RD SUBMISSION	7-17-01
4TH SUBMISSION	9-10-01
5TH SUBMISSION	10-2-01

REVISION RECORD

NO.	CHANGE	DATE
1	PER AURORA	6-25-01
2	PER AURORA	7-17-01
3	PER AURORA	9-10-01
4	PER AURORA	10-2-01

DRAWN KV / DW
CHECKED JE
DATE 10-2-01
SHEET TITLE SITE PLAN NOTES

M+O+A ARCHITECTURAL PARTNERSHIP
ARCHITECTURE PLANNING INTERIOR DESIGN
1900 WAZEE STREET, SUITE 100, DENVER COLORADO 80202, (303) 308-1190

TRW BUILDING AUC-1 2001-6037-00

TRW BUILDING AUC-1
SITE PLAN

LOT 1, BLOCK 1, SHEA CENTER SUBDIVISION FILING NO.1
CITY OF AURORA, COUNTY OF ARAPAHOE, STATE OF COLORADO
A PART OF THE NORTH 1/2 OF SECTION 16, T. 4 S., R. 66 W. OF THE 6TH P.M.

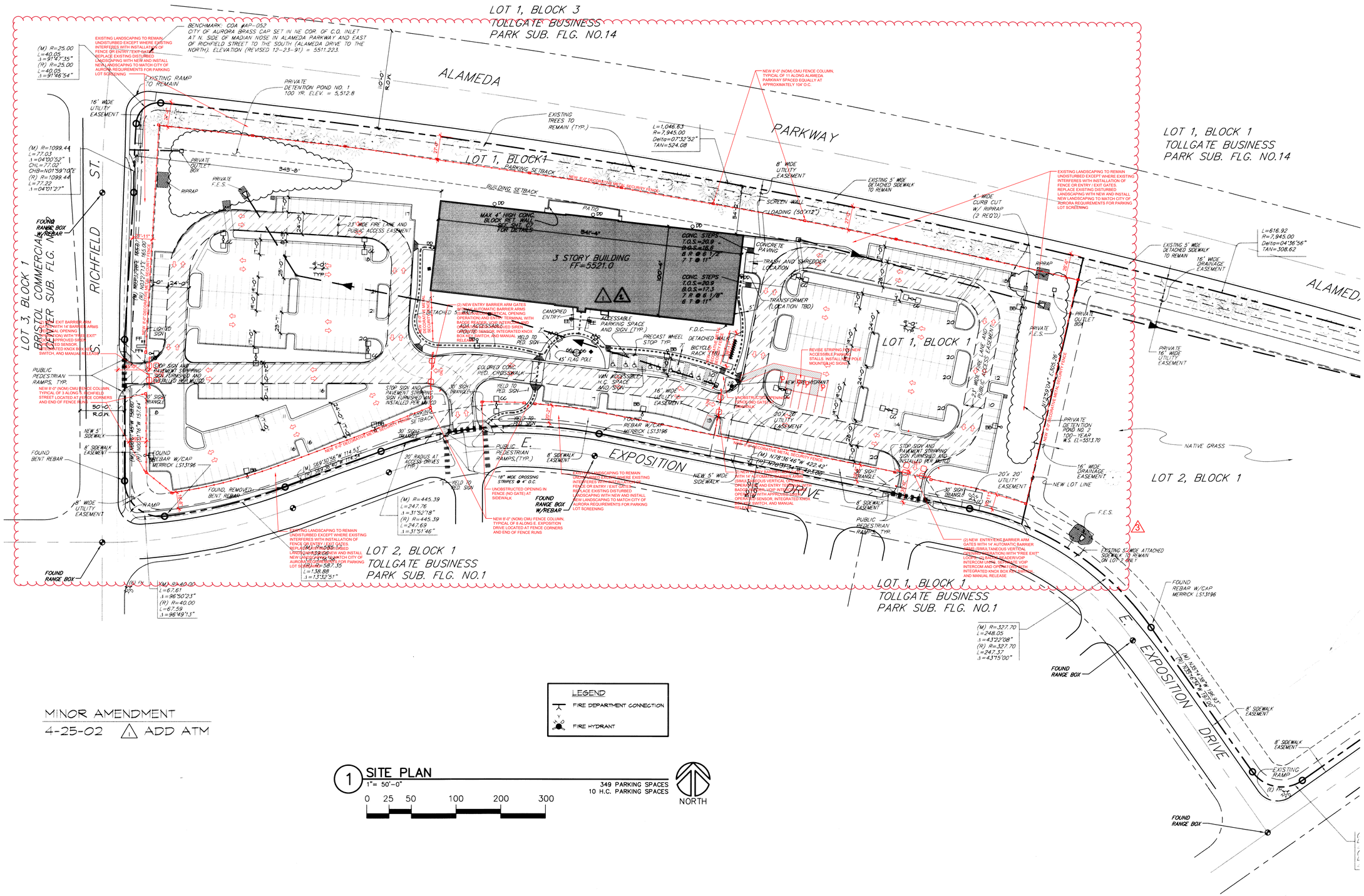

MINOR AMENDMENT
4-25-02 △1 ADD ATM

LEGEND
FIRE DEPARTMENT CONNECTION
FIRE HYDRANT

1 SITE PLAN
1"= 50'-0"
0 25 50 100 200 300

349 PARKING SPACES
10 H.C. PARKING SPACES

NORTH

4-25-02

PROJECT NO. 01109.00

TRW

TRW Building AUC-1
ALAMEDA AND RICHFIELD
AURORA, COLORADO
Shea Properties

PRINT RECORD

PURPOSE	DATE
SP SUBMITTAL	5-11-01
2ND SUBMISSION	6-25-01
3RD SUBMISSION	7-17-01
4TH SUBMISSION	9-10-01
5TH SUBMISSION	10-2-01

REVISION RECORD

NO.	CHANGE	DATE
1	PER AURORA	6-25-01
2	PER AURORA	7-17-01
3	PER AURORA	9-10-01
4	PER AURORA	10-2-01

DRAWN KV
CHECKED JE
DATE 10-2-01
SHEET TITLE
SITE PLAN

M+O+A ARCHITECTURAL PARTNERSHIP
ARCHITECTURE INTERIOR DESIGN PLANNING
9900 MAZEE STREET, SUITE 100, DENVER, COLORADO 80202 (303) 388-1990

SHEET 3 OF 16
TOTAL 16

TRW BUILDING AUC-1 2001-6037-00

TRW BUILDING AUC-1
SITE PLAN

LOT 1, BLOCK 1 SHEA CENTER SUBDIVISION FILING NO. 1
CITY OF AURORA, ARAPAHOE COUNTY, STATE OF COLORADO
A PART OF THE NORTH 1/2 OF SECTION 16, T.4 S, R66 W. OF THE 6TH P.M.
8.133 ACRES

GENERAL NOTES

- THE DEVELOPER, HIS OR HER SUCCESSORS AND ASSIGNS SHALL BE RESPONSIBLE FOR INSTALLATION, MAINTENANCE AND REPLACEMENT OF THE ACCESS CONTROL GATE OR BARRIER SYSTEM TO ENSURE EMERGENCY VEHICLE ACCESS TO WITHIN THE SITE. IF THE ABOVE CONDITIONS ARE NOT MET, THE OWNERS, HIS OR HER SUCCESSORS AND ASSIGNS SHALL BE REQUIRED BY FIRE DPARTMENT ODER NOTICE THAT ALL AFFECTED GATES BE CHAINED AND LOCKED IN THE OPEN POSITION UNTIL REPAIRED OR REPLACED AND RETESTED TO ALL CITY OF AURORA STANDARDS AT THE TIME OF THE VIOLATION. IF THE GATING SYSTEM IS NOT MAINTAINED TO THE SATISFACTION OF THE FIRE DEPARTMENT, THE LICENSE FOR THE EMERGENCY VEHICLE GATE OPENING SYSTEM WILL BE REVOKED AND THE GATING SYSTEM MUST BE REMOVED. MANUALY OPERATED GATING SYSTEMS SHALL BE EQUIPPED WITH A KNOX PADLOCK OR OTHER APPROVED KNOX LOCKING DEVICE. GATING SYSTEMS WILL BE INSTALLED IN ACCORDANCE WITH THE "GATING SYSTEMS CROSSING FIRE APPARATUS ACCESS ROADS CHECKLIST". A SEPARATE BUILDING PERMIT THROUGHT THE BUILDING DIVISION IS REQUIRED TO BE OBTAINED BY THE CONTRACTOR PRIOR TO THE INSTALLATION OF ANY GATING BARRIER SYSTEM THAT CROSSES A DEDICATED FIRE LANE EASEMENT.
- ALL CROSSINGS OR ENCROACHMENTS INTO EASEMENTS AND RIGHTS-OF-WAY OWNED BY THE CITY OF AURORA IDENTIFIED AS BEING PRIATELY-OWNED AND MAINTAINED HEREIN ARE ACKNOWLEDGED BY THE UNDERSIGNED AS BEING SUBJECT TO CITY'S USE AND OCCUPANCY OF SAID EASEMENTS OR RIGHTS-OF-WAY. THE UNDERSIGNED, ITS SUCCESSORS AND ASSIGNS FURTHER AGREE TO REMOVE, REPAIR, REPLACE, RELOCATE, MODIFY, OR OTHERWISE ADJUST SAID CROSSINGS OR ENCROACHMENTS UPON THE REQUEST FROM THE CITY AND AT NO EXPENSE TO THE CITY. THE CITY RESERVES THE RIGHT TO MAKE FULL USE OF THE EASEMENTS AND RIGHTS-OF-WAY AS MAY BE NECESSARY OR CONVENIENT AND THE CITY RETAINS ALL RIGHTS TO OPERATE, MAINTAIN, INSTALL, REPAIR, REMOVE, OR RELOCATE ANY CITY FACILITIES LOCATED WITHIN SAID EASEMENTS AND RIGHTS-OF-WAY AT ANY TIME AND IN SUCH A MANNER AS IT DEEMS NECESSARY OR CONVENIENT.
- ARCHITECTURAL FEATURES (I.E. BAY WINDOWS, FIREPLACES, ROOF OVERHANGS GUTTERS, EAVES, FOUNDATION, FOOTINGS CANTILEVERED WALLS, ETC.) ARE NOT ALLOWED TO ENCROACH INTO ANY EASEMENT OR FIRE LANE.
- THE INSTALLATION OF ANY GATING SYSTEM WILL REQUIRE A CITY OF AURORA LICENSED CONTRACTOR TO OBTAIN A BUILDING PERMIT THROUGH THE AURORA BUILDING DIVISION PRIOR TO THE START OF ANY WORK. THIS WOULD BE CONSIDERD A STRUCTURAL, LIFE SAFETY AND ELECTRICAL REVIEW WITHIN THE BUILDING DIVISION THAT IS CONDUCTED ON BEHALF OF THE FIRE CHIEF.

KEYED SITE PLAN NOTES

#

1. EXISTING PARKING LOT / SITE LIGHTING TO REMAIN.
2. EXISTING ACCESSIBLE PARKING WITH SIGNAGE.
3. EXISTING SIDEWALKS TO REMAIN.
4. EXISTING CURB RAMP TO REMAIN.
5. EXISTING CROSSWALK TO REMAIN.
6. EXISTING ENTRY MONUMENT SIGNAGE.
7. EXISTING FIRE HYDRANT.
8. EXISTING BIKE RACKS - FOR 18 BIKES.
9. EXISTING TRASH AND SHREDDER LOCATION.
10. EXISTING MOTORCYCLE PARKING SPACES.
11. NEW 8'-0" DECORATIVE METAL SECURITY FENCE. SEE SHEET 3B FOR ADDITIONAL INFORMATION.
12. (2) NEW ENTRY BARRIER ARM GATES WITH 14' AUTOMATIC BARRIER ARMS (SIMULTANEOUS VERTICAL OPENING OPERATION) AND ENTRY TERMINAL WITH BADGE READER, VOIP INTERCOM, AND OPERATOR WITH APPROVED SIREN OPERATED SENSOR, INTEGRATED KNOX BOX KEY SWITCH, AND MANUAL RELEASE. REFER TO DETAILS 3/3B AND 7/3B FOR ADDITIONAL INFORMATION.
13. (2) NEW EXIT BARRIER ARM GATES WITH 14' AUTOMATIC BARRIER ARMS (SIMULTANEOUS VERTICAL OPENING OPERATION) WITH "FREE EXIT" LOOPS, (2) BADGE READER/VOIP INTERCOM UNITS, AND OPERATORS WITH INTEGRATED KNOX BOX KEY SWITCH, AND MANUAL RELEASE. REFER TO DETAILS 3/3B, 7/3B AND 11/3B FOR ADDITIONAL INFORMATION.
14. (2) NEW ENTRY/EXIT BARRIER ARM GATES WITH 14' AUTOMATIC BARRIER ARMS (SIMULTANEOUS VERTICAL OPENING OPERATION) WITH "FREE EXIT" LOOPS, (2) BADGE READER/VOIP INTERCOM UNITS, SEPARATE VOIP INTERCOM AND OPERATORS WITH INTEGRATED KNOX BOX KEY SWITCH, AND MANUAL RELEASE REFER TO DETAILS 3/3B, 7/3B AND 11/3B FOR ADDITIONAL INFORMATION.
15. EXISTING LANDSCAPING TO REMAIN UNDISTURBED EXCEPT WHERE EXISTING INTERFERES WITH INSTALLATION OF FENCE OR ENTRY / EXIT GATES. REPLACE EXISTING DISTURBED LANDSCAPING WITH NEW AND INSTALL NEW LANDSCAPING TO MATCH CITY OF AURORA REQUIREMENTS FOR PARKING LOT SCREENING. SEE LANDSCAPE DRAWINGS FOR ADDITIONAL INFORMATION.
16. REVISE STRIPING FOR NEW ACCESSIBLE PARKING STALLS.
17. NEW PAINTED TRAFFIC GRAPHICS.
18. NEW POLE MOUNTED ACCESSIBLE PARKING SPACE SIGN TO MATCH EXISTING ACCESSIBLE PARKING SPACE SIGNS.

LEGEND

- NEW 8'-0" DECORATIVE METAL SECURITY FENCING
- EXISTING SINGLE HEAD LIGHT POLE ON 24" CONCRETE BASE TO REMAIN
- EXISTING DOUBLE HEAD LIGHT POLE ON 24" CONCRETE BASE TO REMAIN

NOTE: ALL SITE LIGHTING IS EXISTING TO REMAIN. THERE ARE NO NEW LIGHT FIXTURES PROPOSED IN THIS SCOPE OF WORK.

- EXISTING FIRE HYDRANT TO REMAIN
- FL — EXISTING FIRE LANE SIGNAGE TO REMAIN

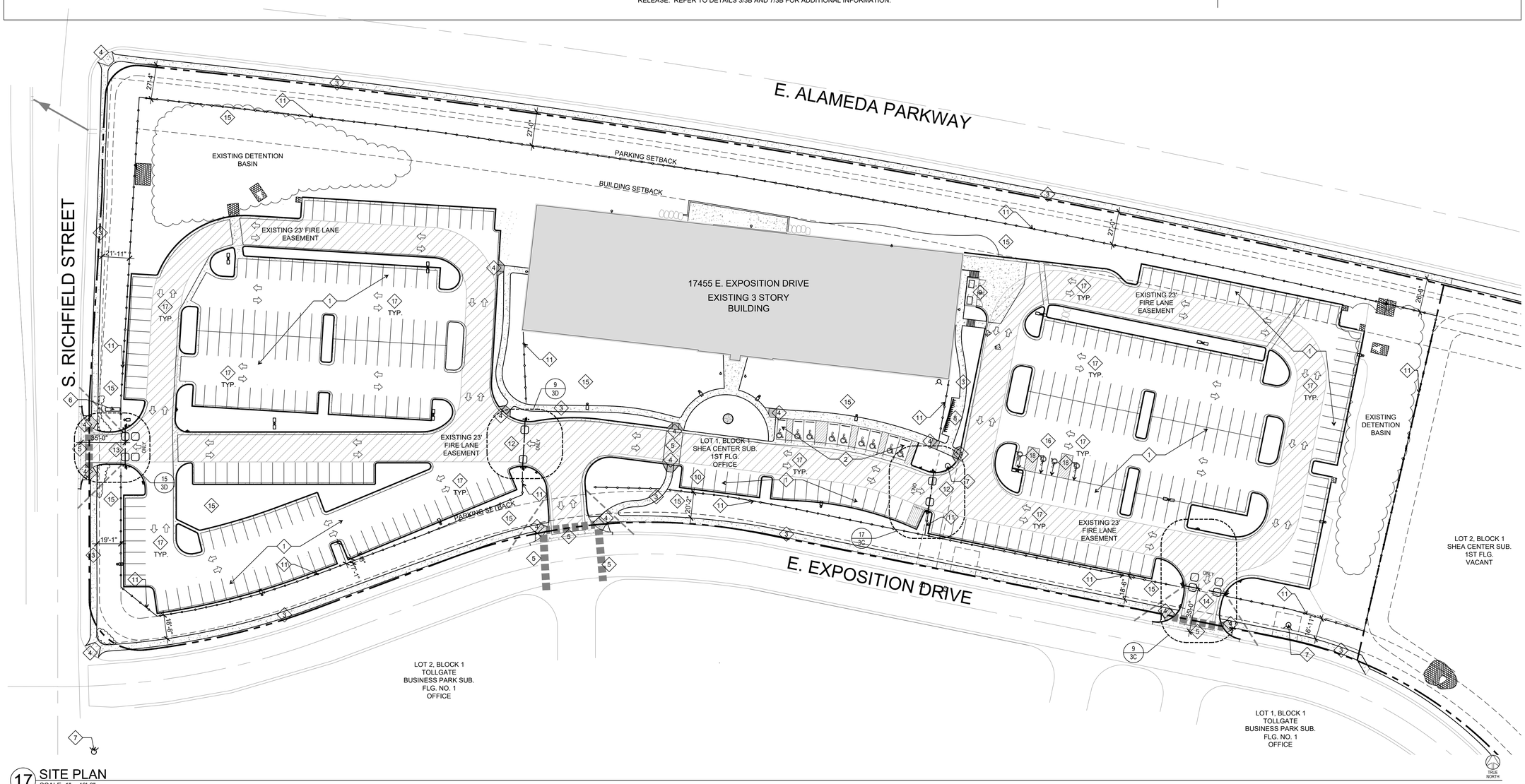

17 SITE PLAN
SCALE: 1" = 40'-0"

McDermott Associates
COMMERCIAL INTERIORS

KC PLAZA
4401 S QUEBEC ST
SUITE #G100
DENVER, CO 80237
PH. 303.953.4266

McDermott:
This document and the ideas and designs incorporated herein, as an instrument of professional service, cannot be used, in whole or in part, for this or any other project, without the written authorization of McDermott.

DAVID P GOODE ARCHITECTURE

558 Castle Pines Parkway
Suite B4-174
Castle Rock, Colorado 80108
Ph: 303-246-4943

NORTHROP GRUMMAN AUC-1
17455 E. EXPOSITION DR. AURORA CO 80017

SUBMITTAL
3 04.25.2022 PRICING SET

PROJECT TEAM
CONTACT: JF
DRAWN BY: JF
REVIEWED BY: DG

CONSULTANTS
STACK LOT

PROJECT DESCRIPTION
PERIMETER FENCING

PROJECT NUMBER
21057.04

SHEET DESCRIPTION
SITE PLAN

SHEET NUMBER
3A

TRW BUILDING AUC-1
SITE PLAN

LOT 1, BLOCK 1 SHEA CENTER SUBDIVISION FILING NO. 1
CITY OF AURORA, ARAPAHOE COUNTY, STATE OF COLORADO
A PART OF THE NORTH 1/2 OF SECTION 16, T.4 S, R66 W. OF THE 6TH P.M.
8.133 ACRES

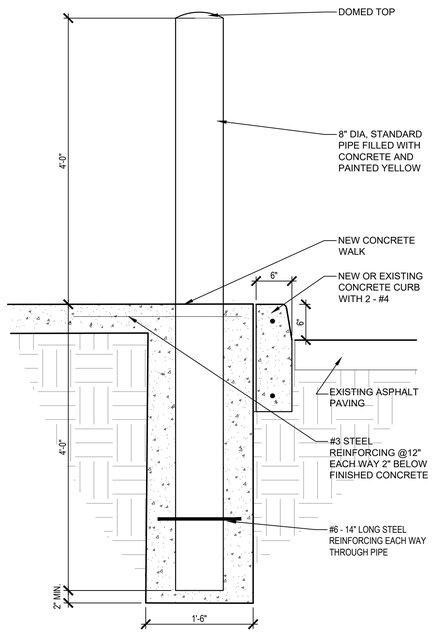

19 BOLLARD DETAIL
SCALE: 1" = 1'-0"

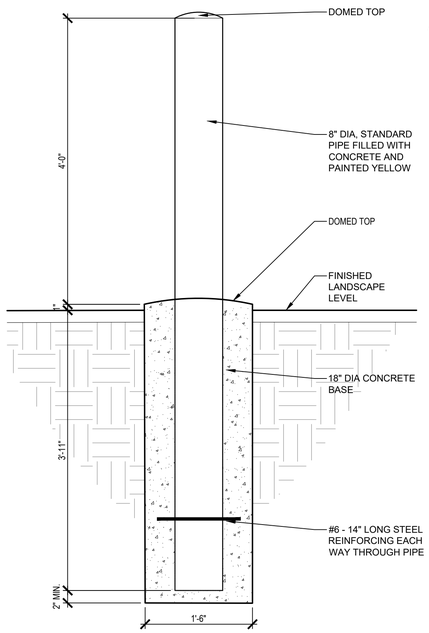

15 BOLLARD DETAIL
SCALE: 1" = 1'-0"

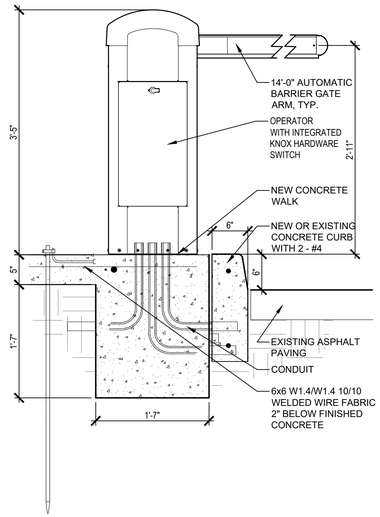

11 BARRIER GATE DETAIL - CURB & WALK
SCALE: 1" = 1'-0"

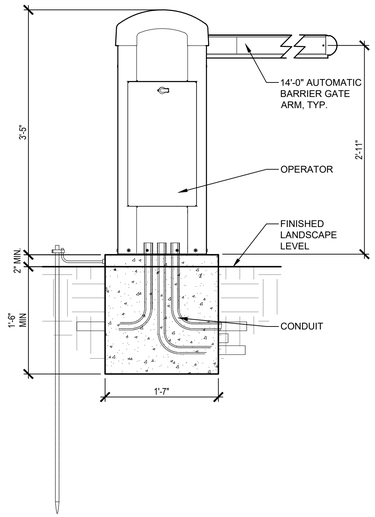

7 BARRIER GATE DETAIL - LANDSCAPE
SCALE: 1" = 1'-0"

MAIN ENTRY GATES:
(2) NEW ENTRY BARRIER ARM GATES WITH 14' AUTOMATIC BARRIER ARMS (SIMULTANEOUS VERTICAL OPENING OPERATION) AND ENTRY TERMINAL WITH BADGE READER, VOIP INTERCOM, AND OPERATORS (PRIMARY AND SECONDARY) WITH APPROVED SIREN OPERATED SENSOR, INTEGRATED KNOX BOX KEY SWITCH, AND MANUAL RELEASE.

MAIN EXIT GATES:
(2) NEW EXIT BARRIER ARM GATES WITH 14' AUTOMATIC BARRIER ARMS (SIMULTANEOUS VERTICAL OPENING OPERATION) WITH "FREE EXIT" LOOP, AND ENTRY TERMINALS WITH BADGE READER, VOIP INTERCOM, AND OPERATORS (PRIMARY AND SECONDARY) WITH INTEGRATED KNOX BOX KEY SWITCH, AND MANUAL RELEASE

ENTRY / EXIT GATES:
(2) NEW EXIT BARRIER ARM GATES WITH 14' AUTOMATIC BARRIER ARMS (SIMULTANEOUS VERTICAL OPENING OPERATION) WITH "FREE EXIT" LOOP, AND ENTRY TERMINALS WITH BADGE READER, VOIP INTERCOM, AND OPERATORS (PRIMARY AND SECONDARY) WITH INTEGRATED KNOX BOX KEY SWITCH, AND MANUAL RELEASE.

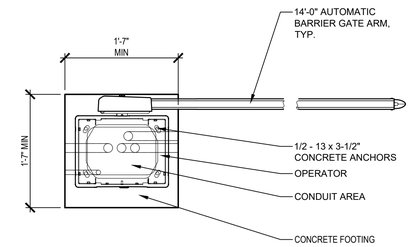

3 BARRIER GATE PLAN
SCALE: 1" = 1'-0"

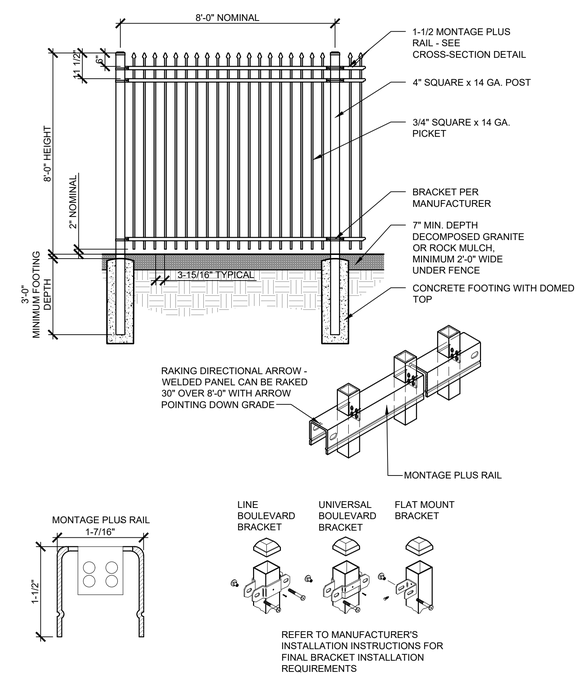

5 FENCE ELEVATIONS AND DETAILS
SCALE: NO SCALE

3

McDermott Associates
COMMERCIAL INTERIORS

KC PLAZA
4401 S QUEBEC ST
SUITE #G100
DENVER, CO 80237
PH. 303.953.4266

McDermott:
This document and the ideas and designs incorporated herein, as an instrument of professional service, cannot be used, in whole or in part, for this or any other project, without the written authorization of McDermott.

DAVID P GOODE ARCHITECTURE

558 Castle Pines Parkway
Suite B4-174
Castle Rock, Colorado 80108
Ph: 303-246-4943

NORTHROP GRUMMAN AUC-1
17455 E. EXPOSITION DR. AURORA CO 80017

SUBMITTAL
04.25.2022 PRICING SET

PROJECT TEAM
CONTACT: JF
DRAWN BY: JF
REVIEWED BY: DG

CONSULTANTS
STACK LOT

PROJECT DESCRIPTION
PERIMETER FENCING

PROJECT NUMBER
21057.04

SHEET DESCRIPTION
FENCE AND GATE ELEVATIONS AND DETAILS

SHEET NUMBER
3B

TRW BUILDING AUC-1
SITE PLAN

LOT 1, BLOCK 1 SHEA CENTER SUBDIVISION FILING NO. 1
CITY OF AURORA, ARAPAHOE COUNTY, STATE OF COLORADO
A PART OF THE NORTH 1/2 OF SECTION 16, T.4 S, R66 W. OF THE 6TH P.M.
8.133 ACRES

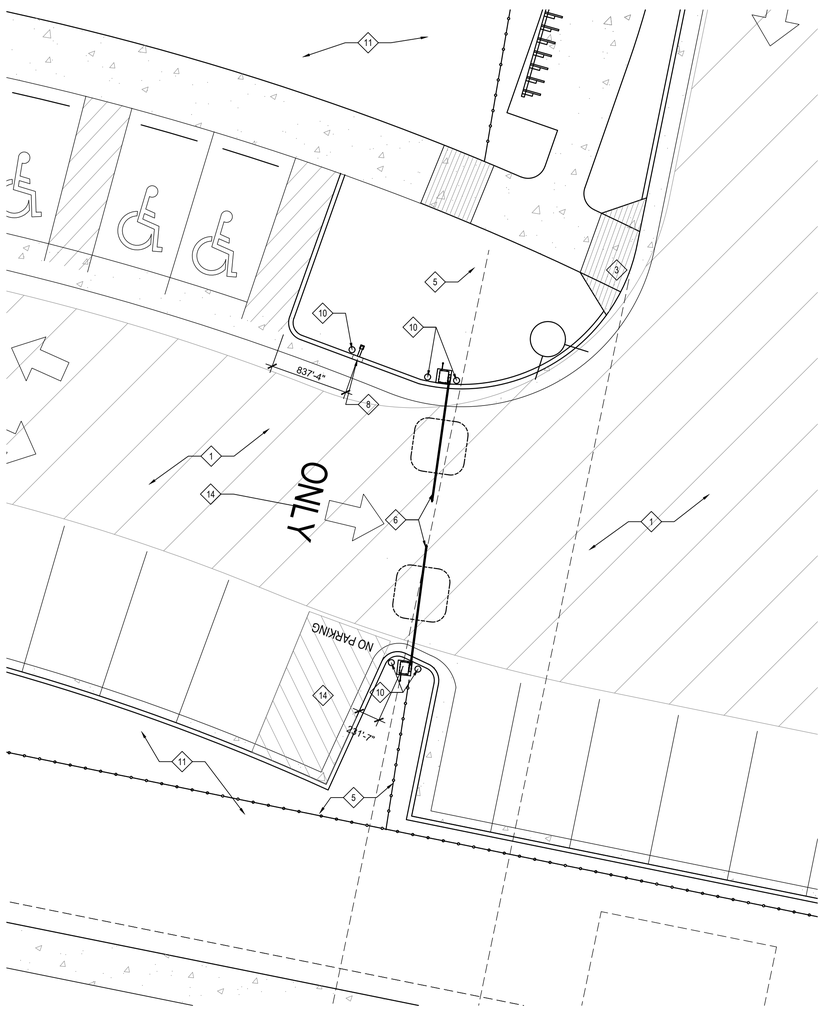

17 ENLARGED VEHICLE ENTRY PLAN
SCALE: 1/8"=1'-0"

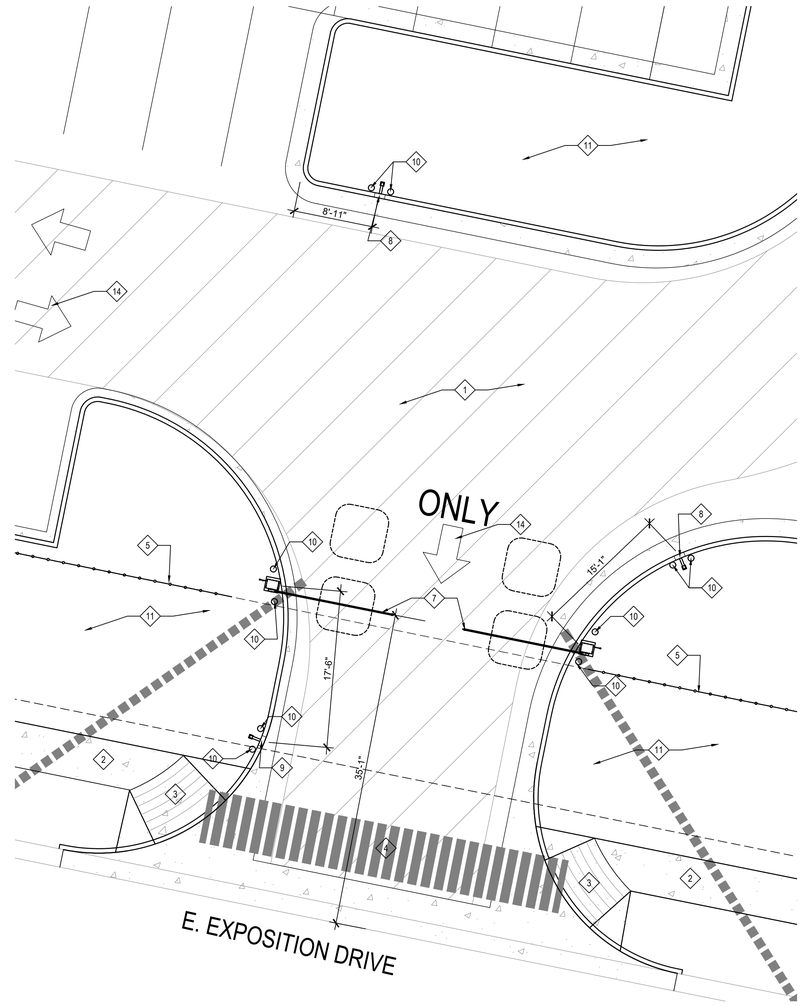

9 ENLARGED EXIT / DELIVERY GATE PLAN
SCALE: 1/8"=1'-0"

KEYED ENLARGED SITE PLAN NOTES

#

1. EXISTING PARKING LOT / SITE LIGHTING TO REMAIN.
2. EXISTING SIDEWALKS TO REMAIN.
3. EXISTING CURB RAMP TO REMAIN.
4. EXISTING CROSSWALK TO REMAIN.
5. NEW 8'-0" DECORATIVE METAL SECURITY FENCE EQUAL TO AMERISTAR MONTAGE COMMERCIAL CLASSIC PROVIDED AND INSTALLED BY G.C. SEE 5/3B FOR FENCE AND GATE DETAILS.
6. (2) NEW ENTRY BARRIER ARM GATES WITH 14' AUTOMATIC BARRIER ARMS (SIMULTANEOUS VERTICAL OPENING OPERATION) AND PRIMARY AND SECONDARY OPERATORS WITH APPROVED SIREN OPERATED SENSOR, INTEGRATED KNOX BOX KEY SWITCH AND MANUAL RELEASE EQUAL TO HYSECURITY STRONG ARM PARK DC 14. BARRIER GATE, OPERATORS AND VEHICLE DETECTION LOOP PROVIDED AND INSTALLED BY G.C. REFER TO DETAILS 3/3B AND 7/3B FOR ADDITIONAL INFORMATION.
7. ((2) NEW ENTRY / EXIT BARRIER ARM GATES WITH 14' AUTOMATIC BARRIER ARMS (SIMULTANEOUS VERTICAL OPENING OPERATION) AND OPERATORS WITH INTEGRATED KNOX BOX KEY SWITCH, AND MANUAL RELEASE EQUAL TO HYSECURITY STRONG ARM PARK DC 14. BARRIER GATE OPERATORS, "FREE EXIT" LOOP, AND VEHICLE DETECTION LOOP PROVIDED AND INSTALLED BY G.C. REFER TO DETAILS 3/3B AND 7/3B FOR ADDITIONAL INFORMATION.
8. NEW CARD READER / INTERCOM AND GOOSENECK PEDESTAL PROVIDED AND INSTALLED BY TENANT. CONCRETE PAD AND SETTING BOLTS PROVIDED AND INSTALLED BY G.C. AS DIRECTED BY TENANT. CONDUIT BACK TO SECURITY OFFICE IN MAIN BUILDING BY G.C.
9. VOIP INTERCOM FOR REQUEST TO ENTER AND GOOSENECK PEDESTAL PROVIDED AND INSTALLED BY TENANT. CONCRETE PAD AND SETTING BOLTS PROVIDED AND INSTALLED BY G.C. AS DIRECTED BY TENANT. CONDUIT BACK TO SECURITY OFFICE IN MAIN BUILDING BY G.C.
10. 8" Ø CONCRETE FILLED PAINTED PIPE BOLLARD PROVIDED AND INSTALLED BY G.C. REFER TO DETAILS 15/3B AND 19/3B FOR ADDITIONAL INFORMATION.
11. EXISTING LANDSCAPING TO REMAIN UNDISTURBED EXCEPT WHERE EXISTING INTERFERES WITH INSTALLATION OF FENCE OR ENTRY / EXIT GATES. REPLACE EXISTING DISTURBED LANDSCAPING WITH NEW AND INSTALL NEW LANDSCAPING TO MATCH CITY OF AURORA REQUIREMENTS FOR PARKING LOT SCREENING. SEE LANDSCAPE DRAWINGS FOR ADDITIONAL INFORMATION.
14. PAVEMENT MARKINGS PER MUTCD REQUIREMENTS BY G.C.

McDermott Associates
COMMERCIAL INTERIORS

KC PLAZA
4401 S QUEBEC ST
SUITE #G100
DENVER, CO 80237
PH. 303.953.4266

McDermott:
This document and the ideas and designs incorporated herein, as an instrument of professional service, cannot be used, in whole or in part, for this or any other project, without the written authorization of McDermott.

DAVID P GOODE ARCHITECTURE

558 Castle Pines Parkway
Suite B4-174
Castle Rock, Colorado 80108
Ph: 303-246-4943

NORTHROP GRUMMAN AUC-1
17455 E. EXPOSITION DR. AURORA CO 80017

SUBMITTAL
3 04.25.2022 PRICING SET

PROJECT TEAM
CONTACT: JF
DRAWN BY: JF
REVIEWED BY: DG

CONSULTANTS
STACK LOT

PROJECT DESCRIPTION
PERIMETER FENCING

PROJECT NUMBER
21057.04

SHEET DESCRIPTION
TRAFFIC CONTROL ENLARGED PLANS

SHEET NUMBER
3 3C

TRW BUILDING AUC-1
SITE PLAN

LOT 1, BLOCK 1 SHEA CENTER SUBDIVISION FILING NO. 1
CITY OF AURORA, ARAPAHOE COUNTY, STATE OF COLORADO
A PART OF THE NORTH 1/2 OF SECTION 16, T.4 S, R66 W. OF THE 6TH P.M.
8.133 ACRES

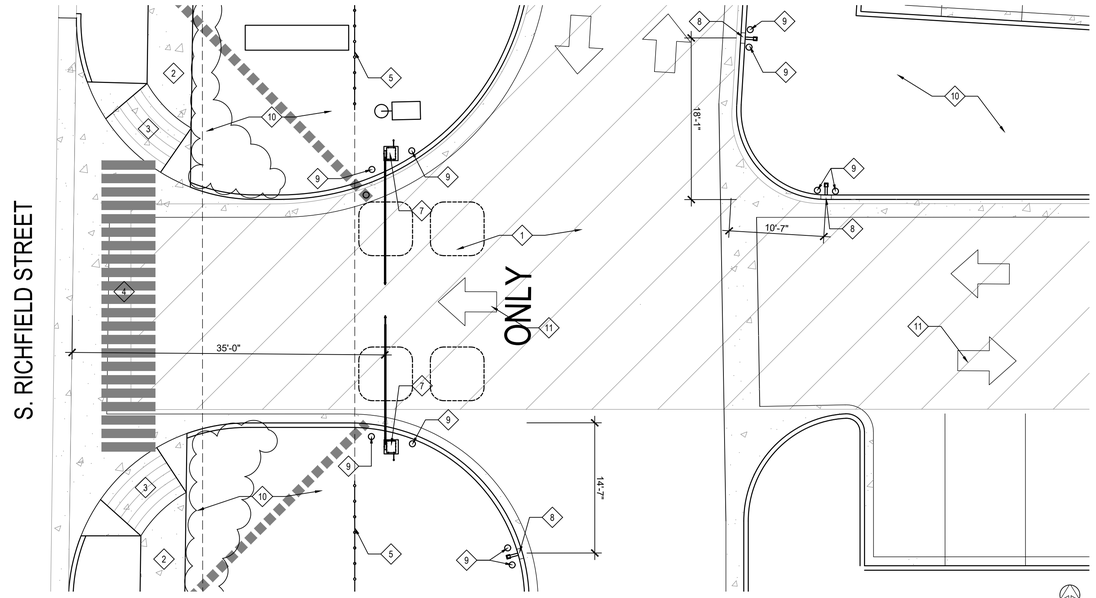

15 ENLARGED VEHICLE EXIT PLAN
SCALE: 1/8"=1'-0"

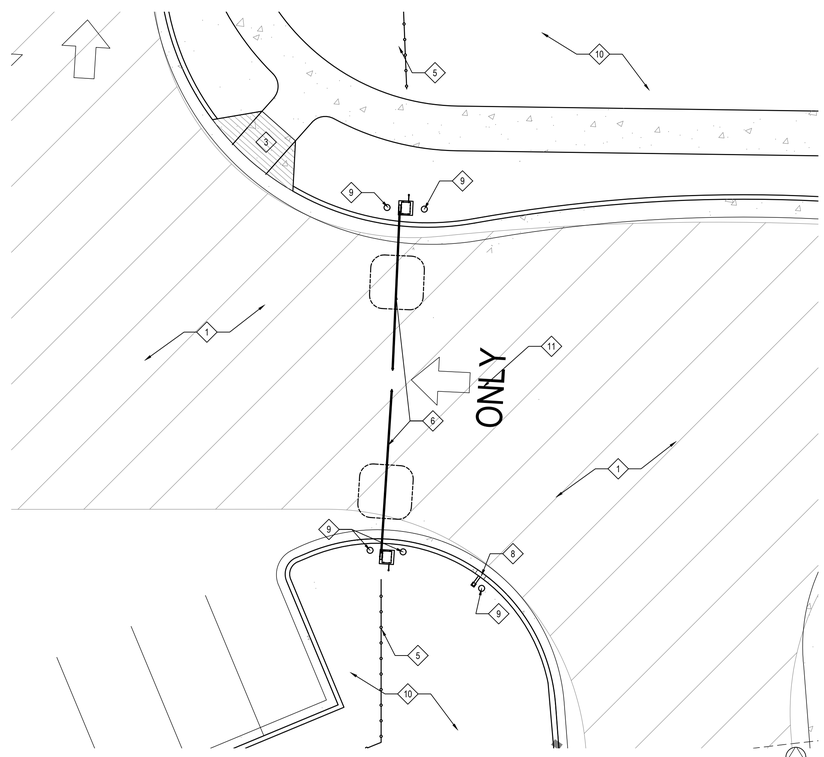

9 ENLARGED DELIVERY GATE PLAN
SCALE: 1/8"=1'-0"

KEYED ENLARGED SITE PLAN NOTES

#

1. EXISTING PARKING LOT / SITE LIGHTING TO REMAIN.
2. EXISTING SIDEWALKS WITH EASEMENTS ON PERIMETER OF PROPERTY.
3. EXISTING CURB RAMP TO REMAIN.
4. EXISTING CROSSWALK TO REMAIN.
5. NEW 8'-0" DECORATIVE METAL SECURITY FENCE EQUAL TO AMERISTAR MONTAGE COMMERCIAL CLASSIC PROVIDED AND INSTALLED BY G.C. SEE 5/3B FOR FENCE AND GATE DETAILS.
6. (2) NEW ENTRY BARRIER ARM GATES WITH 14' AUTOMATIC BARRIER ARMS (SIMULTANEOUS VERTICAL OPENING OPERATION) AND PRIMARY AND SECONDARY OPERATORS WITH APPROVED SIREN OPERATED SENSOR, INTEGRATED KNOX BOX KEY SWITCH AND MANUAL RELEASE EQUAL TO HYSECURITY STRONG ARM PARK DC 14. BARRIER GATE, OPERATORS AND VEHICLE DETECTION LOOP PROVIDED AND INSTALLED BY G.C. REFER TO DETAILS 3/3B AND 7/3B FOR ADDITIONAL INFORMATION.
7. (2) NEW EXIT BARRIER ARM GATES WITH 14' AUTOMATIC BARRIER ARMS (SIMULTANEOUS VERTICAL OPENING OPERATION) WITH "FREE EXIT" LOOP AND PRIMARY AND SECONDARY OPERATORS WITH INTEGRATED KNOX BOX KEY SWITCH, AND MANUAL RELEASE EQUAL TO HYSECURITY STRONG ARM PARK DC 14. BARRIER GATE OPERATORS, "FREE EXIT" LOOP, AND VEHICLE DETECTION LOOP PROVIDED AND INSTALLED BY G.C. REFER TO DETAILS 3/3B, 7/3B AND 11/3B FOR ADDITIONAL INFORMATION.
8. NEW CARD READER / INTERCOM AND GOOSENECK PEDESTAL PROVIDED AND INSTALLED BY TENANT. CONCRETE PAD AND SETTING BOLTS PROVIDED AND INSTALLED BY G.C. AS DIRECTED BY TENANT. CONDUIT BACK TO SECURITY OFFICE IN MAIN BUILDING BY G.C.
9. 8" Ø CONCRETE FILLED PAINTED PIPE BOLLARD PROVIDED AND INSTALLED BY G.C. REFER TO DETAILS 15/3B AND 19/3B FOR ADDITIONAL INFORMATION
10. EXISTING LANDSCAPING TO REMAIN UNDISTURBED EXCEPT WHERE EXISTING INTERFERES WITH INSTALLATION OF FENCE OR ENTRY / EXIT GATES. REPLACE EXISTING DISTURBED LANDSCAPING WITH NEW AND INSTALL NEW LANDSCAPING TO MATCH CITY OF AURORA REQUIREMENTS FOR PARKING LOT SCREENING. SEE LANDSCAPE DRAWINGS FOR ADDITIONAL INFORMATION.
11. PAVEMENT MARKINGS PER MUTCD REQUIREMENTS BY G.C.

McDermott Associates
COMMERCIAL INTERIORS

KC PLAZA
4401 S QUEBEC ST
SUITE #G100
DENVER, CO 80237
PH. 303.953.4266

McDermott:
This document and the ideas and designs incorporated herein, as an instrument of professional service, cannot be used, in whole or in part, for this or any other project, without the written authorization of McDermott.

DAVID P GOODE ARCHITECTURE

558 Castle Pines Parkway
Suite B4-174
Castle Rock, Colorado 80108
Ph: 303-246-4943

NORTHROP GRUMMAN AUC-1
17455 E. EXPOSITION DR. AURORA CO 80017

SUBMITTAL
04.25.2022 PRICING SET

PROJECT TEAM
CONTACT: JF
DRAWN BY: JF
REVIEWED BY: DG

CONSULTANTS
STACK LOT

PROJECT DESCRIPTION
PERIMETER FENCING

PROJECT NUMBER
21057.04

SHEET DESCRIPTION
TRAFFIC CONTROL ENLARGED PLANS

SHEET NUMBER
3D